RESIDENTIAL ELECTRONIC LOCKS

www.hafele.co.nz

WELCOME TO SMART LOCK

App-Controlled

To get started, download HÄFELE lock app from the App Store or Google Play store.

Register for an account and follow instructions on screen to pair device.

For best results, lock should be within 3m (10ft) bluetooth range to your smart device. HÄFELE app requires mobile internet connection.

Available on the App Store

ANDROID APP ON Google play

ESSENTIAL IN EVERY HOME AND PROPERTY

Multiple entry modes
Works with PIN codes, smart cards, bluetooth keys on smartphone, and emergency physical keys.

Mobile app-enabled
Grant access to your home when you're away, and set duration of PIN codes or bluetooth keys.

Works offline
Our encryption technology allows your lock to work without internet connectivity, increasing reliability against WiFi hacking.

Keyless convenience
No more hassle of locating forgotten keys and no more frustration of accidental lock-outs.

View access logs
Monitor when visitors enter your home for peace of mind. PIN code access logs are updated whenever the master owner uses a bluetooth key.

Automate Check-in
Airbnb hosts can sync listing calendars with their account so that PIN codes are automatically created for guests.
* Fees apply

* App interface, product appearance, and specifications are subject to continuous enhancements or modifications.

SMART MORTISE LOCK

Superior security and cutting-edge technology now come in a premium form - the HÄFELE Smart Mortise Lock. It is outstanding in quality, and comes packed with smart features.

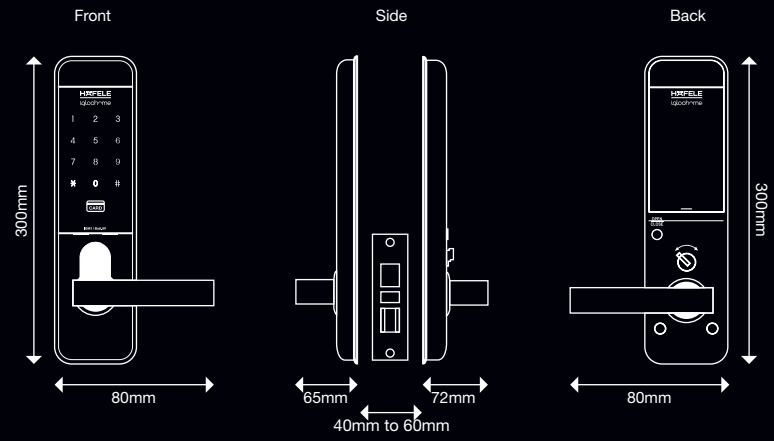

Cat. No 912.05.384

App-Controlled

MORTISE FEATURES

Security Lockout Mode
If an invalid PIN code is entered 5 times, the keybox will stop operating for 1 minute.

Electro Static Discharge Prevention
The circuit board is protected from the damages incurred from a high voltage surge.

Fire Alarm
When the sensor detects a temperature between 50-70 degree celsius inside the house, the Mortise will unlock automatically.

Low Battery Warning
A beep sound and red flashing keypad indicates when battery power runs slow.

Tamper Alarm
The lock will sound if intruders attempt to pry the lock from the door.

Volume Adjusting
Select the volume of the lock that suits your needs.

Anti-Panic Exit System
Allows you to open the door by simply pulling down on the lock handle from inside, without twisting a separate thumbturn.

Emergency Power Supply
When lock batteries are flat, an external DC9V battery can be used to jump-start the keybox.

Sensor Re-Lock
The lock will re-lock when the door is closed.

Specifications

Door compatibility	
Door thickness	40mm to 60mm
Clearance from door edge	>190mm (with handle)
Type of door	Wooden doors (right / left-hand compatible)
Dimensions	
Outer body	80 x 303 x 17.8(mm)
Inner body	79.8 x 302.4 x 26(mm)
Weight	1.97kg
Material	
Outer body	Al, ABS
Inner body	Al, Zn, ABS
Operation method	PIN code, Bluetooth Key, RFID sticker, Emergency physical key
Colour	Black
Operation temperature	~20°C~50°C
Emergency power	DC9V Alkaline Battery (not included)
Power	4 AA Batteries
Battery life	Up to 1 year
Usage	To be installed in sheltered areas

Mode of access

- Bluetooth
- Smart Card
- Password
- Key

SMART DEADBOLT LOCK

Version 2S

The HÄFELE Deadbolt is essential in every home and property.

App-Controlled

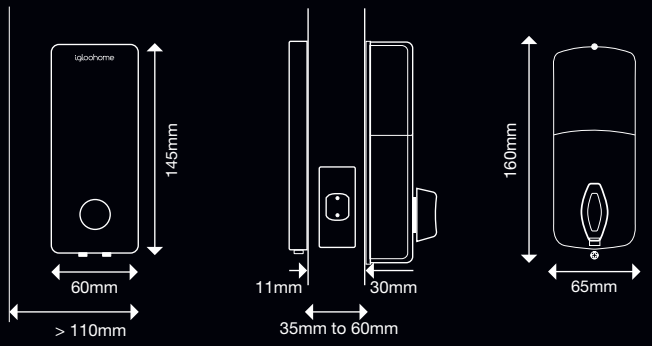

Cat. No 912.05.388

DEADBOLT FEATURES

Security Lockout Mode
If an invalid PIN code is entered 5 times, the keybox will stop operating for 1 minute.

Decoy Security Code
Enter random digits before your password to reduce risk of intruders checking fingerprints.

Speedy Bluetooth Unlocking
With our latest chip enhancements, unlocking via bluetooth key is even quicker than before.

Privacy Mode NEW
Activate this from indoors to prevent electronic entry from the outside.

Tamper Alarm NEW
The lock will sound if intruders attempt to pry the lock from the door.

Emergency Power Supply NEW
When the lock betteries are flat, an external DC9V battery can be used to jump-start the lock.

Timed Re-lock NEW
Select the duration (in seconds) before the lock automatically locks.

Specifications

Door compatibility	
Door thickness	38mm to 50mm
Clearance from door edge	>105mm
Type of door	Wooden doors (right / left-hand compatible)
Dimensions	
Outer body	60 x 142 x 30(mm)
Inner body	65 x 160 x 50(mm)
Weight	1.5kg
Material	
Outer body	Zn, ABS
Inner body	Zn, ABS
Operation method	PIN code, Bluetooth Key, Emergency key
Colour	Black
Operation temperature	0°C~50°C
Emergency power	DC9V Alkaline Battery (not included)
Power	4 AA Batteries (up to 9 months)

Mode of access

- Bluetooth
- Password
- Key

DIGITAL LOCK EL8000

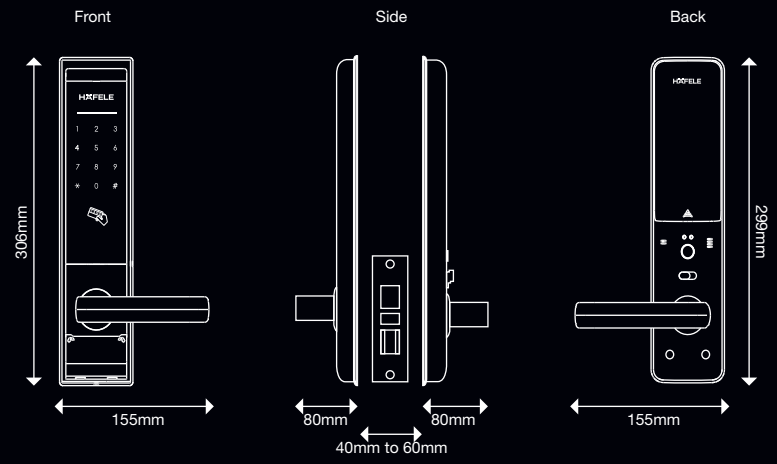

Cat. No 912.05.359

EL8000 FEATURES

> Dimension:
  -Front module: 76(W) x 306(H) x 28(D)
  -Back module: 71(W) x 298.6(H) x 30.7(D)
  -Mortise lock: 123(W) x 109.5(H) x 24.5(D)
> Volume control function of operating sound 8 steps
> Movement indicator in 8 different colors
> Random security coding function
> Panic release handle type
> Free door handle direction
> Auto locking function
> Auto relocking function
> Auto/manual locking mode selectable
> Movement indicating sound
> Low battery warning function
> Secret code back up function
> Register up to 8 secret codes
> Register up to 20 card keys
> Power saving mode
> Intrusion warning function
> Mischief and hacking prevention system
> Card loss control
> Double locking function
> Safety design against fire
> For door thickness 40 - 50mm
> Backset 70mm

Supplied with

> 1 front and rear module
> 1 mortise lock and striking plate
> 1 set of fixing material
> 1 user manual
> 1 installation template
> 8 pcs of batteries
> 2 cards, 35 x 25mm (S)
> 2 cards, 85.5 x 54mm (B)
> 3 mechanical keys

Mode of access

Smart Card

Password

Key

Card 35 x 25mm (S)

Mechanical key

Card 85.5 x 54mm (B)

DIGITAL LOCK ER4800

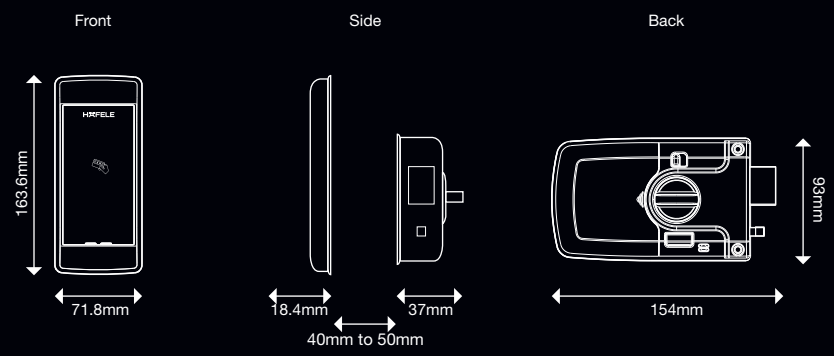

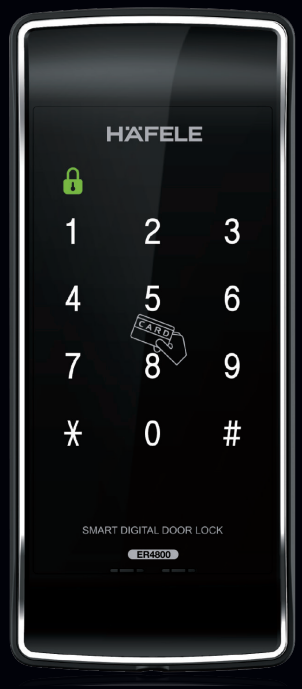

Cat. No 912.05.361

ER4800 FEATURES

> Dimension:
  -Front module: 71.8(W) x 163.6(H) x 18.4(D)
  -Back module: 154(W) x 93(H) x 37(D)
> Smart card 50 pieces
> Password 10 pieces
> Two way solution
> Random security coding function
> Auto locking function
> Auto relocking function
> One touch button suspension function (lock/unlock button)
> Low battery warning function
> Volume control function
> Movement indicating sound
> Intrusion warning function
> Mischief and hacking prevention system
> Double locking function
> For door thickness 40 - 50mm

Supplied with

> 1 front and rear module
> 1 Striking plate
> 1 set of fixing material
> 1 user manual
> 1 installation template
> 4 pcs of batteries
> 2 cards, 35 x 25mm (S)
> 2 cards, 85.5 x 54mm (B)

Mode of access

Smart Card

Password

Key

Card 35 x 25mm (S)

Card 85.5 x 54mm (B)

HÄFELE

Häfele New Zealand Ltd. | Auckland Head Office 16 Accent Drive, East Tamaki, Auckland 2013 | Wellington Design Centre
The Wool Store, Level 1 262 Thorndon Quay | Christchurch Design Centre 5 Wigram Close, Sockburn
Phone: 0800 442 335 | **Email:** info@hafele.co.nz | **www.hafele.co.nz**