Loox

HÄFELE

833.72.040
833.72.041
833.72.042
833.72.043
833.72.044
833.72.045
833.72.046

LED 2022

12 V System	K	W	T_A	mm	mm	~ =
833.72.043 833.72.040	3000 K	1.5 W	-20 °C – +35 °C -4 °F – +95 °F	Ø 35 x 14	≥ Ø 45 x 24	Loox 12 V
833.72.044 833.72.041	4000 K					
833.72.045 833.72.042	5000 K					
833.72.046	3000 K					

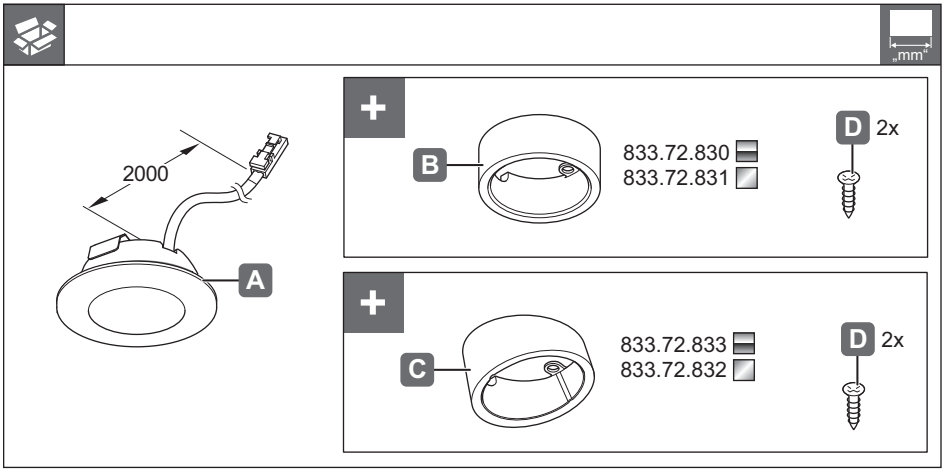

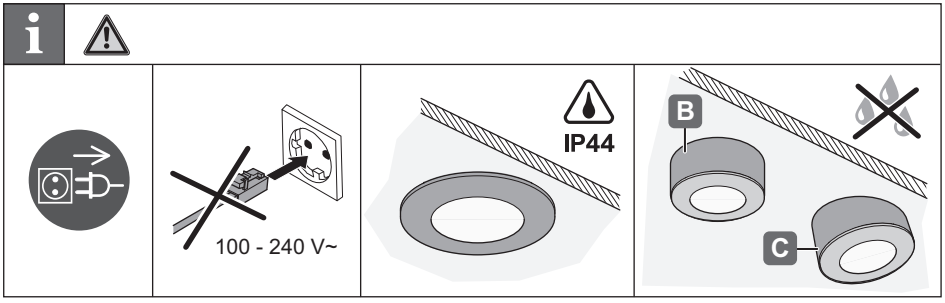

732.28.354

HDE 03/2015

RoHS IP20 IP44

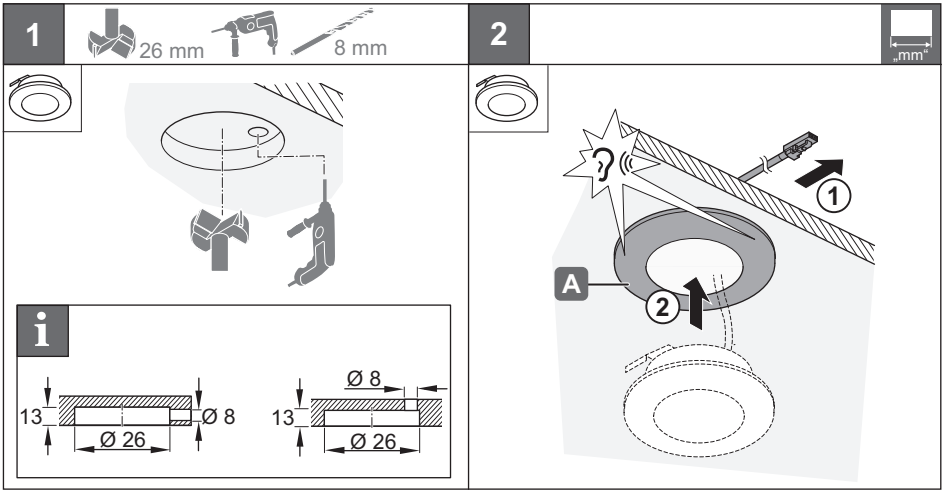

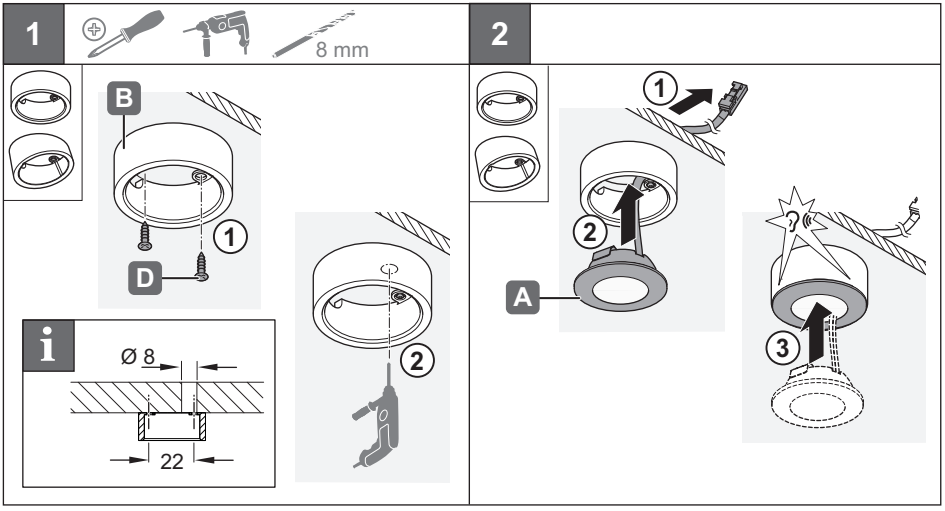

732.28.354

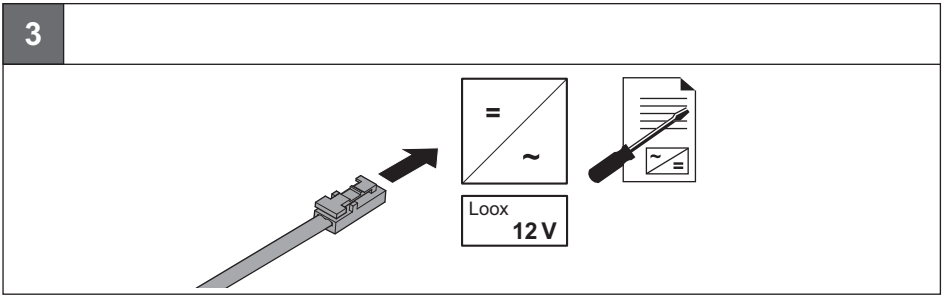

HDE 03/2015

Subject to alterations

© 2015 by Häfele GmbH & Co KG
Adolf-Häfele-Str. 1 · D-72202 Nagold · www.hafele.com